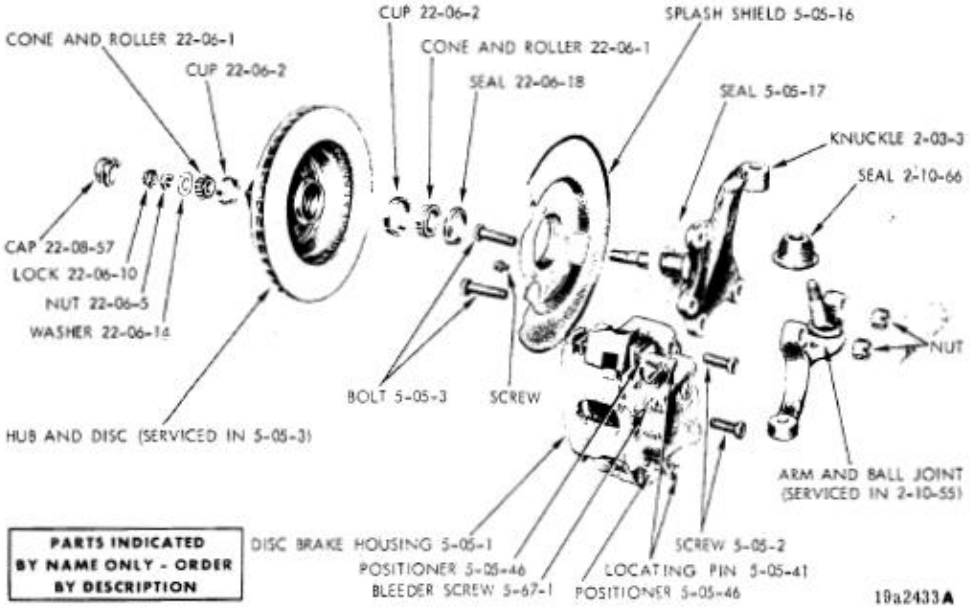

DISC BRAKE AND CALIPER - PLYMOUTH, DODGE, CHRYSLER AND IMPERIAL